Dopyt

KOMBINOVANÁ SIRÉNA CS1 S BLIKAČOM, PRIEMER 93 MM

Série CS1

C111221005
CS1 siréna/záblesk LED oranžový 24 V



- Rýchla inštalácia vďaka systému bajonetových zámkov
- Výber z 32 tónov
- Akustická intenzita 86 - 106 dB
- Krytie IP65

POPIS PRODUKTU

Sirény pre vnútorné a vonkajšie použitie (IP 65), druh tónu je voliteľný DIP-prepínačom vnútri. Oba typy možno objednať v bielej a červenej farbe.

ŠPECIFIKÁCIA

Druh montáže	Horizontálny, Vertikálny
Farba	Oranžová
Farba tela	Biela
Frekvencia blikania	1 Hz
Frekvencia max	2900 Hz
Frekvencia min	440 Hz
Hladina zvuku max	109 dB
Hladina zvuku min	88 dB
Hmotnosť	258 g
Menovitý prúd max	0,041 A
Menovitý prúd min	0,014 A
Napájacie napätie	24 V
Napájacie napätie AC / DC max.	35 V
Napájacie napätie AC / DC min.	18 V
Ovládanie zvuku	Áno

Počet tónov	32 ks
Prevádzková teplota max.	70 °C
Prevádzková teplota min.	-20 °C
Trieda krytia	IP65
Typ zdroja	Oranžová LED
Zdroj svetla	LED



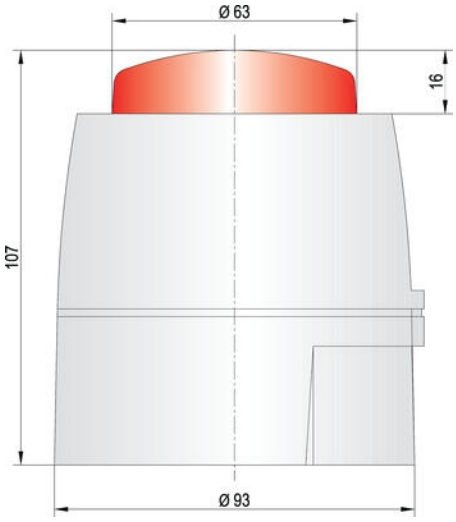

Tontabelle / Tone table

Nr.	Sound	Tone frequency	DIP-switch	2nd stage alarm (Hz)
1	LF Sweep	800 - 1000Hz @ 0.5 sec	1 1 1 1 1	800 cont
2	Alternative wailer BS standard	800/960Hz @ 2Hz	1 1 1 1 0	800 cont
3	Wailer Tone BS standard	800/1000Hz @ 0.5 sec	1 1 1 0 1	800 cont
4	Alternative wailer BS standard	800/1000Hz @ 2Hz	1 1 1 0 0	100 cont
5	HF Back up interrupted tone	2800Hz @ 1.0 sec on/off	1 1 0 1 1	2800 cont
6	LF Back up Alarm	800Hz @ 180 msec on/off	1 1 0 1 0	800 cont
7	HF Back up interrupted tone - fast	2800Hz @ 180 msec on/off	1 1 0 0 1	800 cont
8	LF Continuous tone BS5839	800Hz cont	1 1 0 0 0	Same tone
9	Sweep tone (1Hz)	800/900Hz @ 1Hz	1 0 1 1 1	800 cont
10	Australian slow whoop	Intermittent 970Hz 0.625ms on/0.625ms off	1 0 1 1 0	500-1200 3.75 sec on 0.25 sec off
11	Dutch sweep tone	970Hz cont	1 0 1 0 1	500-1200 3.5 sec on 0.5 sec off
12	Analogue sweep tone	800/600Hz @ 2Hz	1 0 1 0 0	100 cont
13	Sweep tone (3Hz)	800/970Hz @ 3Hz	1 0 0 1 1	800 cont
14	Alternate HF slow sweep	2800/2900Hz @ 3Hz	1 0 0 1 0	2400 cont
15	Fast HF sweep	2400-2800Hz @ 7Hz	1 0 0 0 1	2400 cont
16	US Temporal Pattern LF	0.5kHz for 0.5 sec on 0.5 sec off x3 then 1.5 sec then repeat	1 0 0 0 0	800 cont
17	Interrupted tone BS staddar	Interrupted tne 800Hz @ 0.5 sec on/of	0 1 1 1 1	800 cont
18	ISO 8201 LF BS5839 Pt 1 99	Intermittent 970Hz 500ms on/500ms of	0 1 1 1 0	Same tone
19	Interrupted tone medium	1100Hz @ 0.25 sec on/off	0 1 1 0 1	800 cont
20	ISO8201 HF	Intermittent 970Hz 500 ms on 500 ms off	0 1 1 0 0	Same tone
21	Continuous tone	1100Hz continuous	0 1 0 1 1	Same tone
22	LF Buzz	800-950Hz swept @ 110Hz	0 1 0 1 0	800 cont
23	HF Continuous	2800Hz	0 1 0 0 1	2800 cont
24	Sweep tone (1Hz)	800-970Hz @ 1Hz	0 1 0 0 0	800 cont
25	German DIN tone	Sweep 1200-500Hz @ 1Hz	0 0 1 1 1	800 cont
26	Swedish Fire signal	Intermittent 660Hz 150 ms on / 150 ms of	0 0 1 1 0	Same tone
27	French tone AFNOR	554kHz for 100 ms and 440Hz for 400m	0 0 1 0 1	800 cont
28	Swedish all clear signal	Continuous 660Hz	0 0 1 0 0	Same tone
29	US Temporal Pattern HF	2500Hz for 0.5 sec on 0.5 off x3, off for 1.5 sec then repeat	0 0 0 1 1	2900 cont
30	Siren 2 way ramp (short	500/1200Hz rising then falling @ 25 se	0 0 0 1 0	800 cont
31	P.P 1063.1 - Telecom	Alternating tone 800/970 Hzgis 2Hz	0 0 0 0 1	800 cont
32	Siren 2 way ramp (long	500/1200Hz 3 sec rising / 3 seg fallin	0 0 0 0 0	800 cont

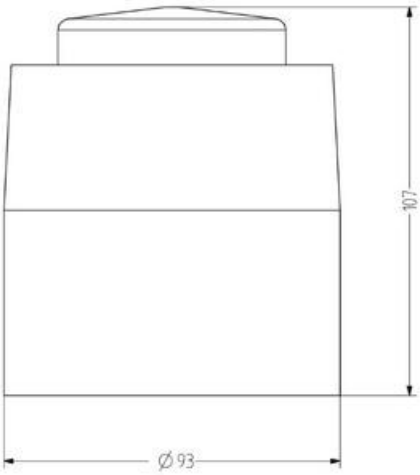

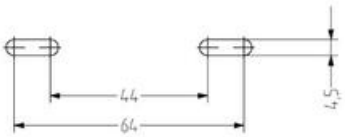



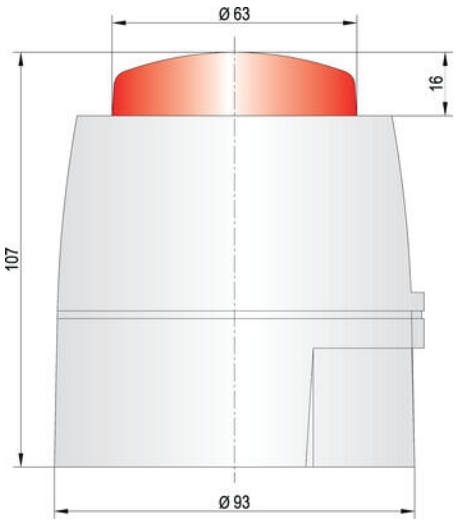

Tontabelle / Tone table

Nr.	Sound	Tone frequency	DIP-switch	2nd stage alarm (Hz)
1	LF Sweep	800 - 1000Hz @ 0.5 sec	1 1 1 1 1	800 cont
2	Alternative warble BS standard	800/960Hz @ 2Hz	1 1 1 1 0	800 cont
3	Warble Tone BS standard	800/1000Hz @ 0.5 sec	1 1 1 0 1	800 cont
4	Alternative warble BS standard	500/600Hz @ 2Hz	1 1 1 0 0	500 cont
5	HF Back up interrupted tone	2800Hz @ 1.0 sec on/off	1 1 0 1 1	2800 cont
6	LF Back up Alarm	800Hz @ 150 msec on/off	1 1 0 1 0	800 cont
7	HF Back up interrupted tone - fast	2800Hz @ 150 msec on/off	1 1 0 0 1	800 cont
8	LF Continuous tone BS5839	800Hz cont	1 1 0 0 0	Same tone
9	Sweep tone (1Hz)	800/900Hz @ 1Hz	1 0 1 1 1	800 cont
10	Australian slow whoop	Intermittent 970Hz 0.625ms on/0.625ms off	1 0 1 1 0	500-1200 3.75 sec on 0.25 sec off
11	Dutch sweep tone	970Hz cont	1 0 1 0 1	500-1200 3.5 sec on 0.5 sec off
12	Analogue sweep tone	500/600Hz @ 2Hz	1 0 1 0 0	500 cont
13	Sweep tone (3Hz)	800/970Hz @ 3Hz	1 0 0 1 1	800 cont
14	Alternate HF slow sweep	2380/2900Hz @ 3Hz	1 0 0 1 0	2400 cont
15	Fast HF sweep	2400-2800Hz @ 7Hz	1 0 0 0 1	2400 cont
16	US Temporal Pattern LF	950Hz for 0.5 sec on 0.5 sec off x3 then 1.5 sec then repeat	1 0 0 0 0	800 cont
17	Interrupted tone BS stakdar	Interrupted tne 800Hz @ 0.5 sec on/of	0 1 1 1 1	800 cont
18	ISO 8201 LF BS5839 Pt 1 1998	Intermittent 970Hz 500ms on/500ms of	0 1 1 1 0	Same tone
19	Interrupted tone medium	1000Hz @ 0.25 sec on/off	0 1 1 0 1	800 cont
20	ISO8201 HF	Intermittent 970Hz 500 ms on /500 ms off	0 1 1 0 0	Same tone
21	Continuous tone	1000Hz continuous	0 1 0 1 1	Same tone
22	LF Buzz	800-950Hz sweat @ 110Hz	0 1 0 1 0	800 cont
23	HF Continuous	2800Hz	0 1 0 0 1	2800 cont
24	Sweep tone (5Hz)	800-970Hz @ 9Hz	0 1 0 0 0	800 cont
25	German DIN tone	Sweep 1200-500Hz @ 1Hz	0 0 1 1 1	800 cont
26	Swedish Fire sisting	Intermittent 660Hz 150 ms on / 150 ms of	0 0 1 1 0	Same tone
27	French tone AFNOR	554Hz for 100 ms and 440Hz for 400m	0 0 1 0 1	800 cont
28	Swedish all clear signal	Continuous 660Hz	0 0 1 0 0	Same tone
29	US Temperal Pattern HF	2900Hz for 0.5 sec on 0.5 off x3, off for 1.5 sec then repeat	0 0 0 1 1	2900 cont
30	Siren 2 way ramp [short	500/1200Hz rising then falling @ 2.5 se	0 0 0 1 0	800 cont
31	FP 1063.1 - Telecom	Alternating tone 800/970 Hz @ 2H	0 0 0 0 1	800 cont
32	Siren 2 way ramp [long	500/1200Hz 3 sec rising / 3 sec fallin	0 0 0 0 0	800 cont

