Dopyt

MASÍVNE MEMBRÁNOVÉ SIRÉNY SÉRIE HPT / HTG

Série HPT/HTG

712100005
HPT siréna plastová 24 Vss



- Membránová siréna
- 108 dB
- HPT: IP55, HTG: IP65

POPIS PRODUKTU

Výkonná univerzálna siréna s lievikom do vnútorného i vonkajšieho prostredia.

ŠPECIFIKÁCIA

Druh montáže	Vertikálny
Farba tela	Šedá RAL 7035
Hladina zvuku max	108 dB
Hladina zvuku min	108 dB
Hmotnosť	800 g
Menovitý prúd max	0,6 A
Menovitý prúd min	0,6 A
Napájacie napätie DC max.	26,4 V DC
Napájacie napätie DC min.	21,6 V DC
Napätie	24 V DC
Počet tónov	1 ks
Prevádzková teplota max.	50 °C
Prevádzková teplota min.	-20 °C
Prierez vodičov	2,5 mm²
Trieda krytia	IP55

The sound pressure decreases by 6 dB when doubling the distance; the following distance table is to be seen as Indication, as also factors like tone type, wind speed, wind direction, humidity, weather conditions etc. do influence the sound pressure level.

Distance (m)	Sound pressure dB (A)																			
1	65	70	75	80	85	90	92	94	96	98	100	102	104	106	108	110	112	114	116	118	120
2	59	64	69	74	79	84	86	88	90	92	94	96	98	100	102	104	106	108	110	112	114
3	55	60	65	70	75	80	82	84	86	88	90	92	94	96	98	100	102	104	106	108	110
5	51	56	61	66	71	76	78	80	82	84	86	88	90	92	94	96	98	100	102	104	106
10	45	50	55	60	65	70	72	74	76	78	80	82	84	86	88	90	92	94	96	98	100
20	39	44	49	54	59	64	66	68	70	72	74	76	78	80	82	84	86	88	90	92	94
30	35	40	45	50	55	60	62	64	66	68	70	72	74	76	78	80	82	84	86	88	90
50		36	41	46	51	56	58	60	62	64	66	68	70	72	74	76	78	80	82	84	86
100				40	45	50	52	54	56	58	60	62	64	66	68	70	72	74	76	78	80
200					39	44	46	48	50	52	54	56	58	60	62	64	66	68	70	72	74
500							38	40	42	44	46	48	50	52	54	56	58	60	62	64	66

The sound pressure decreases by 6 dB when doubling the distance

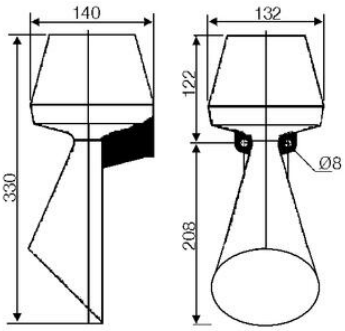

The sound pressure decreases by 6 dB when doubling the distance; the following distance table is to be seen as Indication, as also factors like tone type, wind speed, wind direction, humidity, weather conditions etc. do influence the sound pressure level.

Distance (m)	Sound pressure dB (A)																			
1	65	70	75	80	85	90	92	94	96	98	100	102	104	106	108	110	112	114	116	118	120
2	59	64	69	74	79	84	86	88	90	92	94	96	98	100	102	104	106	108	110	112	114
3	55	60	65	70	75	80	82	84	86	88	90	92	94	96	98	100	102	104	106	108	110
5	51	56	61	66	71	76	78	80	82	84	86	88	90	92	94	96	98	100	102	104	106
10	45	50	55	60	65	70	72	74	76	78	80	82	84	86	88	90	92	94	96	98	100
20	39	44	49	54	59	64	66	68	70	72	74	76	78	80	82	84	86	88	90	92	94
30	35	40	45	50	55	60	62	64	66	68	70	72	74	76	78	80	82	84	86	88	90
50		36	41	46	51	56	58	60	62	64	66	68	70	72	74	76	78	80	82	84	86
100				40	45	50	52	54	56	58	60	62	64	66	68	70	72	74	76	78	80
200					39	44	46	48	50	52	54	56	58	60	62	64	66	68	70	72	74
500							38	40	42	44	46	48	50	52	54	56	58	60	62	64	66

The sound pressure decreases by 6 dB when doubling the distance

