Dopyt

SNÍMAČE TEPLOTY

Séria TR10-C

TR10C-14362270
Snímac teploty PT100 2-vodicový 50-250°C 250x9
G1/4 form2G

- PT100, PT1000
- Teplota -196 až 600°C
- Pripojenie M, NPT
- Médiá voda, plyny, oleje
- ATEX, IECEx, SIL2, GOST

POPIS PRODUKTU

ŠPECIFIKÁCIA

Insertion length	250 mm
Materiál kontaktnej časti	Nerezová oceľ 316Ti
Materiál tela	Hliník
Neck length	0,13 m
Plug diameter	9 mm
Prevádzková teplota max.	250 °C
Prevádzková teplota min.	-50 °C
Teplota okolia do	80 °C
Teplota okolia od	-40 °C
Trieda krytia	IP65

Protection tube designs

Protection tube straight, mounting thread, form 2G DIN 43772

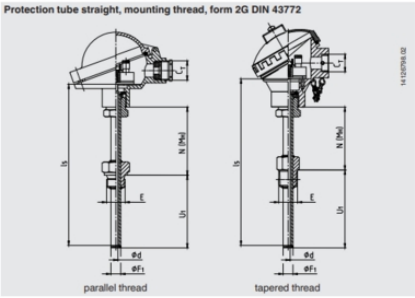

Protection tube straight, plain, form 2 DIN 43772, with/without compression fitting

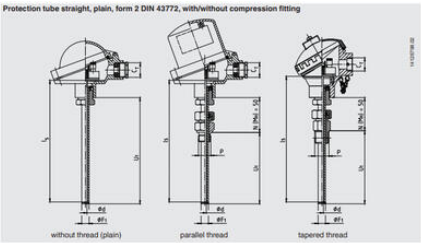

Protection tube tapered, mounting thread, form 3G DIN 43772

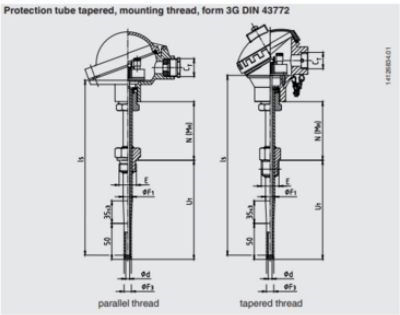

Protection tube tapered, plain, form 3 DIN 43772, with/without compression fitting

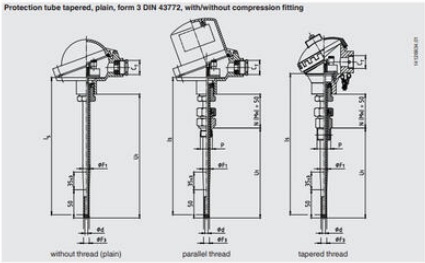

Protection tube designs

Protection tube straight, mounting thread, form 2G DIN 43772

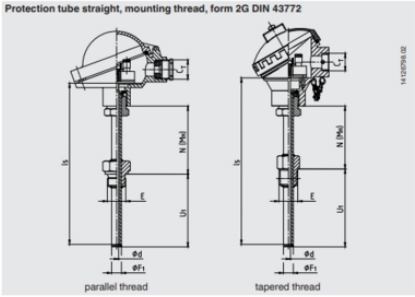

Protection tube straight, plain, form 2 DIN 43772, with/without compression fitting

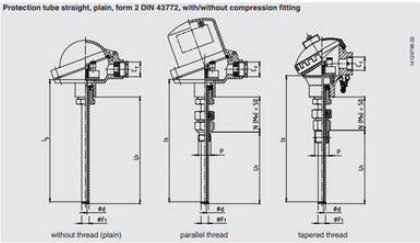

Protection tube tapered, mounting thread, form 3G DIN 43772

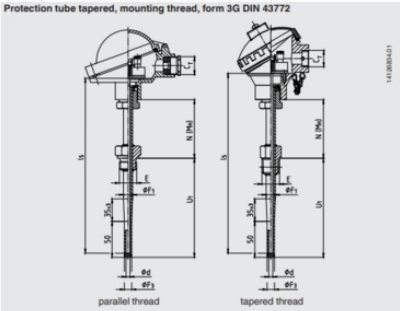
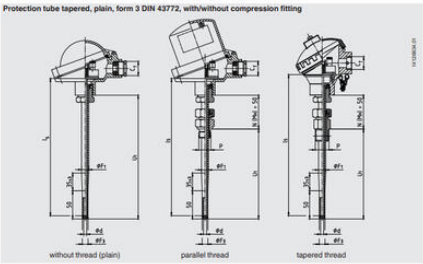
Protection tube tapered, plain, form 3 DIN 43772, with/without compression fitting